YT-7600-L4 Lens Specification

云泰型号: YT-7600-L4	
客户型号:	
MAX Img-Circle（mm）	ø6.72
EFL（mm）	2.2
F/NO.	2.4
Optical TTL	17.08
Mechanical TTL	17.08
BACK FOCAL LENGTH	4.70
FLANGE BACK LENGTH	3.02
TV DISTORTION	<-33%
RELATIVE ILLUMINATION	>80%
CRA	18.2°
Pixel Size (μm)	3.0*3.0
Storage At Temperature	−40℃~+85℃
Recent Camera Distance	0.2
Infrared	940/15um
WAVELENGTH	@425~635nm Tavg≥90% @940±10nm T>80%
Dust Level	IPX7
STRUCTURE	6G+IR

1/2.7"	(1920*1080)
D(ø6.61)	178°
H(ø5.76)	154°
V(ø3.24)	86°

REV.	00
REVISON HISTORY	
2024/03/16	NEW

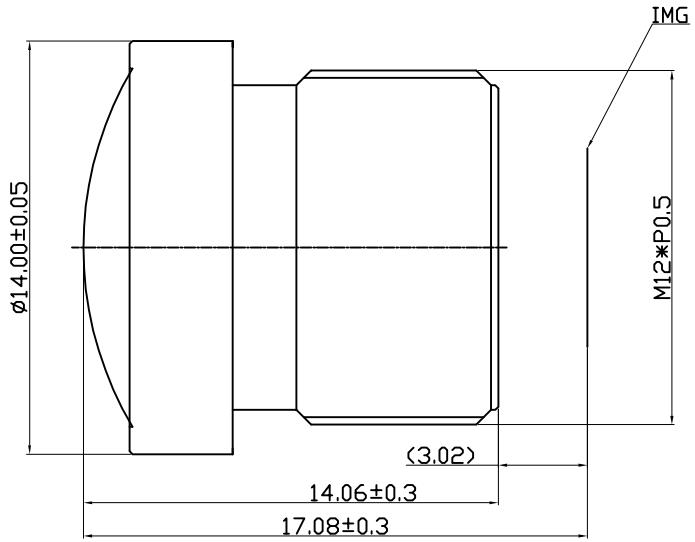

REV	DESCRIPTION	DATE	NAME
①			
②			
③			
④			

NAME	YT-7600-L4-SPEC		SCALE		DRAWN	黄光深
VIEW		REV 00	DATE	2024.03.16	CHECKED	
Wintop Optics			BORDER		APPROVED	