YT-7070-H1-A Lens Specification

MAX Img-Circle（mm）	ϕ4.2
EFL（mm）	0.98
F/NO.	2.0
Optical TTL	16.30
Mechanical TTL	16.30
BACK FOCAL LENGTH	2.07
FLANGE BACK LENGTH	1.51
OPT DISTORTION	-137%
RELATIVE ILLUMINATION	>45%
CRA	17.6°
Pixel Size（μm）	6.0*6.0
Storage At Temperature	-40℃/+85℃
Recent Camera Distance	0.2
Infrared	No
WAVELENGTH	@420~600nm Tavg≥90% @650±10nm T=50%
Dust Level	IP69K

□V7955(1280*960)		
D/F□V	>200°	ϕ4.99
H/F□V	196°	ϕ4.03
V/F□V	151°	ϕ2.95

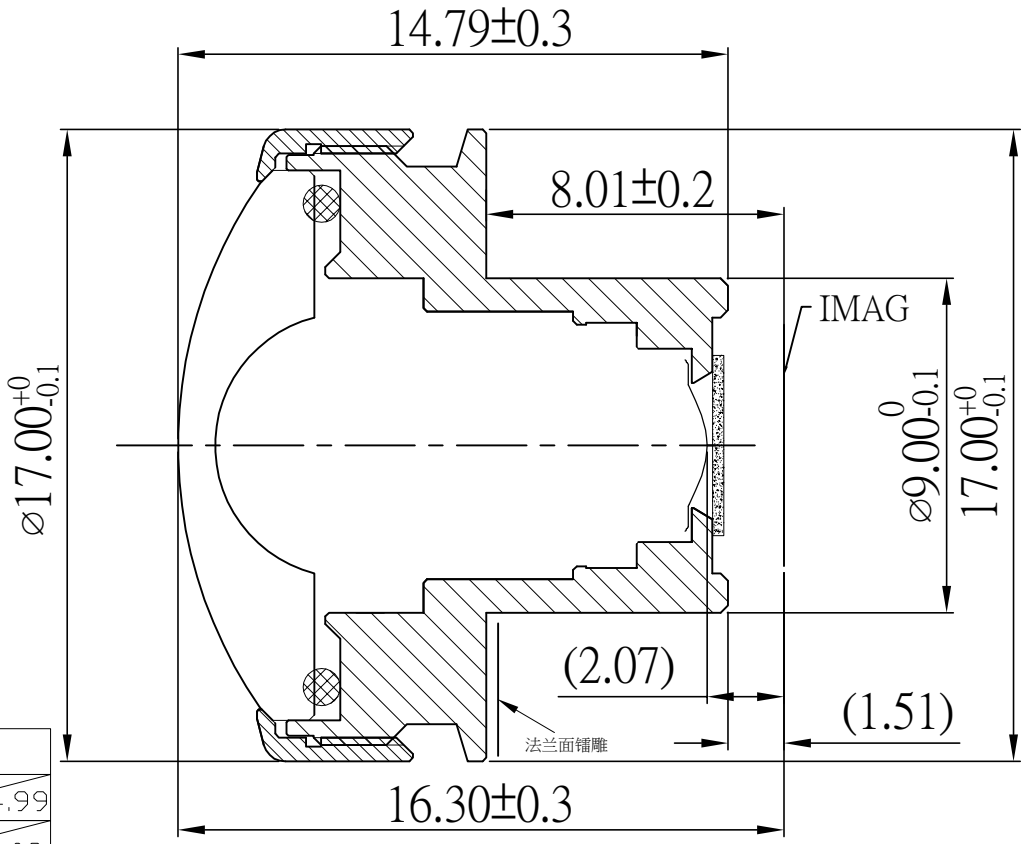

REV.	00
REVISON HISTORY	
2024/03/18	NEW

REV	DESCRIPTION	DATE	NAME
①			
②			
③			
④			

NAME	YT-7070-H1-A-SPEC		SCALE		DRAWN	黄光深
VIEW		REV 00	DATE	2024.03.18	CHECKED	
Wintop Optics			BORDER		APPROVED	