YT-7066-C1-A Lens Specification

云泰型号:	客户型号:
YT-7066-C1-A	

MAX Img-Circle（mm）	ø4.0
EFL（mm）	0.95
F/NO.	1.6
Optical TTL	13.00
Mechanical TTL	13.00
BACK FOCAL LENGTH	2.25
FLANGE BACK LENGTH	1.46
Optical Distortion	-146%
Relative Illumination	>38%
CRA	10.8°
For Pixel Size (μm)	2.1*2.1
Storage At Temperature	-40℃~+85℃
Recent Camera Distance	0.2M
WAVELENGTH	@420~620nm Tavg≥90% @650±10nm T=50%
Water Level	IP69K

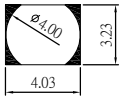

成像画面

		OX03D4C	1920*1536
		D(FOV)	>200° ø5.16
		H(FOV)	>200° ø4.03
		V(FOV)	166° ø3.23

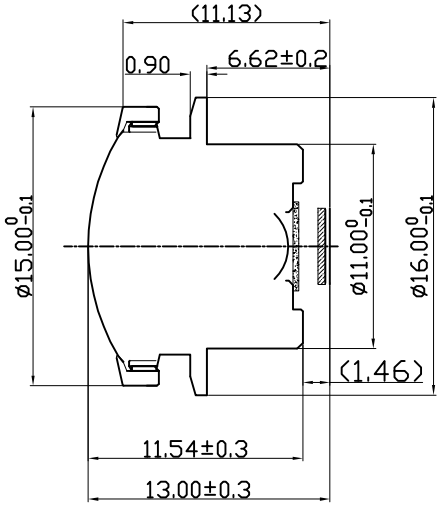

REV.	00
REVISON HISTORY	
2023/03/16	NEW

REV	DESCRIPTION	DATE	NAME
①			
②			
③			
④			

NAME	YT-7066-C1-A-SPEC		SCALE		DRAWN	黄光深
VIEW		REV 00	DATE	2024.03.16	CHECKED	
Wintop Optics			BORDER		APPROVED	