YT-3559P-C8 Lens Specification

NAME: YT-3559P-C8

MAX Img-Circle (mm)	ø7.0
EFL (mm)	3.19
F/NO.	2.4
Optical TTL	22.41
Mechanical TTL	22.46
BACK FOCAL LENGTH	2.93
FLANGE BACK LENGTH	1.43
TV DISTORTION	<-1.0%
RELATIVE ILLUMINATION	>63%
CRA	14.6°
Pixel Size (μm)	2.0um*2.0um
Storage At Temperature	-20℃~+70℃
Recent Camera Distance	0.2 m
Infrared	No
WAVELENGTH	@420~600nm Tavg≥90% @650±10nm T=50%
Dust Level	IP5X

IMX335	2592*1944
D	92° / ø6.48
H	77° / ø5.18
V	62° / ø3.89

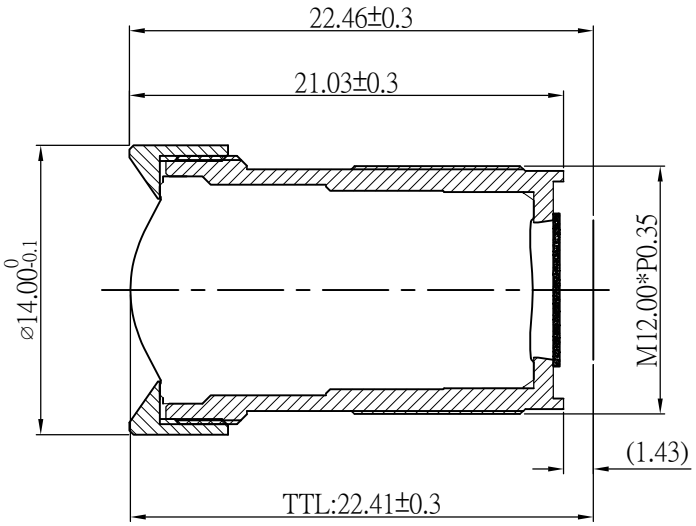

REV.	00
REVISON HISTORY	
2024/03/16	NEW

REV	DESCRIPTION	DATE	NAME
①			
②			
③			
④			

NAME	YT-3559P-C8-SPEC		SCALE		DRAWN	黄光深
VIEW		REV 00	DATE	2024.03.16	CHECKED	
Wintop Optics			BORDER		APPROVED	